SILVER LAKE AUTO
SLIDING DOORS SYSTEM

JNF.15.743

INSTALLATION MANUAL EN

⚠ WARNING

A. Incorrect use can cause damage to property or the user.

B. Misuse can cause serious injury or death.

C. **PLEASE** read the instructions carefully before proceeding with the installation.

D. This manual **MUST BE** kept for maintenance.

CONTENTS

EN

1. SAFETY PRECAUTIONS **04**
2. TECHNICAL DATA **05**
3. REQUIREMENTS FOR A SAFE ASSEMBLY **06**
4. INSTALLATION **07**
- **A.** MEASURES **07**
- **B.** PERFORMING THE SECURITY ANALYSIS **09**
- **C.** LIST OF COMPONENTS **10**

5. INSTALLATION INSTRUCTIONS **11**
- **A.** POSITION **11**
- **B.** TOOLS **11**
- **C.** PREPARATION OF THE TRACK AND COVER **12**
- **D.** SUGGESTED CABLE POSITION **12**
- **E.** SIDE PANEL TOP AND TRACK (OPTIONAL) **12**
- **F.** TRACK **13**
- **G.** SIDE PANEL (OPTIONAL) **14**
- **H.** CABLE SUPPORT **14**
- **I.** GROUND WIRE **15**
- **J.** GUIDE ADJUSTMENT **15**
- **K.** CARRIAGE **16**
- **L.** DOOR INSTALLATION **17**
- **M.** DOOR HEIGHT ADJUSTMENT **18**
- **N.** ANTI DROP DEVICE **18**
- **O.** STOPPER **19**
- **P.** INACTIVE EQUIPMENT **19**
- **Q.** MOTOR **20**
- **R.** BELT **21**
- **S.** BELT SUPPORT **23**
- **T.** SENSOR SUPPORT **23**
- **U.** CONTROL UNIT SUPPORT **24**
- **V.** CABLE WIRING **24**
- **W.** CABLES **25**
- **X.** COVERS **25**

6. OPERATING INSTRUCTIONS **26**
- **A.** CONFIGURATION **26**
- **B.** MAXIMUM OUTPUT POWER FOR OPTIONAL ACCESSORIES **27**
- **C.** OPERATING MODES OF THE CONTROL UNIT **27**
- **D.** WIRING FOR OPTIONAL ACCESSORIES **28**
- **E.** CONTROL UNIT CONFIGURATION AND ADJUSTMENT **29**

7. MAINTENANCE **35**
8. TROUBLESHOOTING **36**
9. WARRANTY **37**

⚠ WARNING

Do not attempt to operate until you have completely read and understood all instructions, rules, etc. contained in this manual. Keep this manual and review it frequently for safe and continuous operation.

1. To maintain accuracy and performance, the automatic sliding door must be correctly operated and installed under favorable environmental conditions.

2. Improper operation can cause damage to the automatic sliding door and in extreme cases can cause serious injury to the operator.

3. It is forbidden to install **MECANO** as a safety device or protection against storms, in emergency routes / exits or fire doors.

4. Suitable for doors weighing 20-80kg / single strip.

5. Do not allow children to play with the device.

6. The device must not be used by people (including children) with reduced physical, sensory or mental abilities or lack of experience and knowledge, unless they have received supervision or instruction.

7. Inspect the installation frequently for imbalances and signs of wear or damage to cables, rollers and all other mounting accessories, etc. Do not use components that are necessary for repair or adjustment.

8. Disconnect the power supply before installation, cleaning or other maintenance. If the system is connected to the cable that comes directly from the wall, check that the power supply is turned off.

9. The installer must verify that the temperature marked on the device is suitable for the location.

10. Before installing the device, check that all components are in good mechanical condition.

11. After installation, check that the mechanism is adjusted correctly.

12. **MECANO** follows the EN 16005 low energy operational standard, offering the following advantages:
- The dynamic force that measures at any point on the closing edges is not dangerous.
- The system does not need to be equipped with a protection sensor due to its high level safety.
- For use in special conditions, such as the elderly, children and the disabled, additional safety sensors are optional and can be equipped.

13. Follow the instructions below to use the correct port for the **MECANO** system.
The design of installation, material and construction of the door must be in accordance with EN 16005.

DOOR TYPE
tempered glass (ESG) or laminated glass (VSG)

CALCULATION OF DOOR WEIGHT
door weight = width (cm) x height (cm) x glass thickness (cm) X0.0026

EXAMPLE
width 90 x height 200 x glass thickness 0.8 X0.0026 = 37.44 kgs

(Note: include the weight of the handle)

WARNING

POWER SUPPLY
100-240V CA; 50/60 Hz

CIRCUIT PROCTECTION
1 A (disconnecting devices must comply with wire installation rules)

CABLE TYPE
3x0,75mm (if the power cord is damaged, it must be replaced by the manufacturer or its service agent or similar qualified person in order to avoid a hazardous situation)

WARNING

POWER CONSUMPTION WITHOUT EXTERNAL ACCESSORIES

STAND BY MODE
5W

AUTOMATIC MODE
40W (máx.)

DOOR WEIGHT
20-80kg / single strip

TEMPERATURE
5-40ºC

HUMIDITY
30-70%

NOISE
máx. 55dB (A)

WARNING

Risk of crushing / cutting / impact.
The risk of crushing, cutting and impact can occur during the movement of the automatic door, the main closing edge / secondary closing edge.

Assembly of the **MECANO** system may only be carried out by qualified personnel.
Installation of electrical equipment may only be carried out by an electrician.

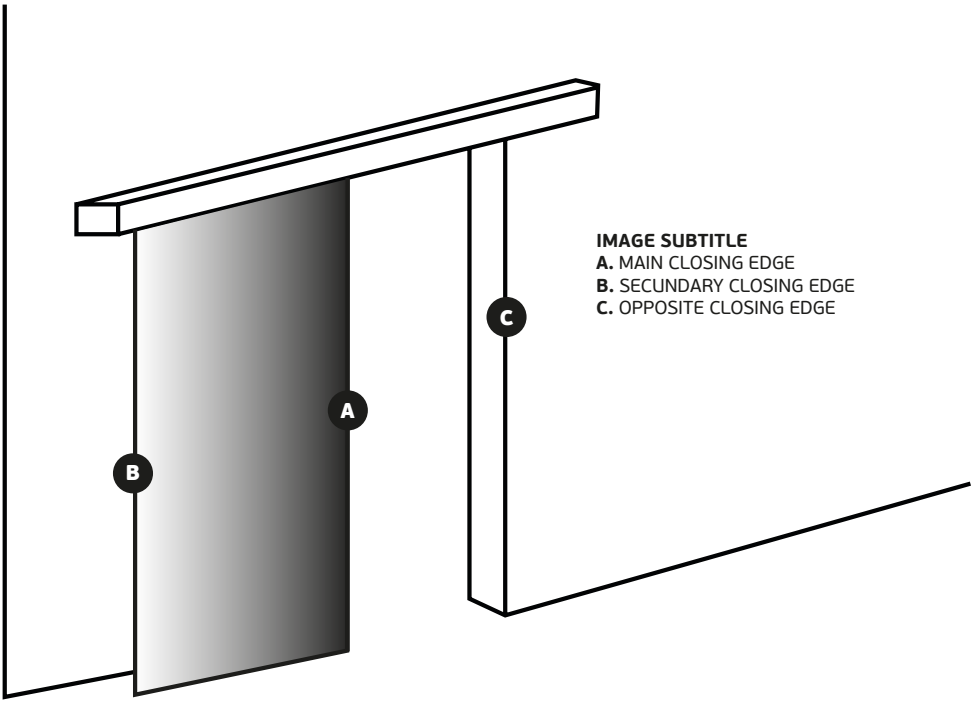

IMAGE SUBTITLE
A. MAIN CLOSING EDGE
B. SECUNDARY CLOSING EDGE
C. OPPOSITE CLOSING EDGE

A.MEASURES

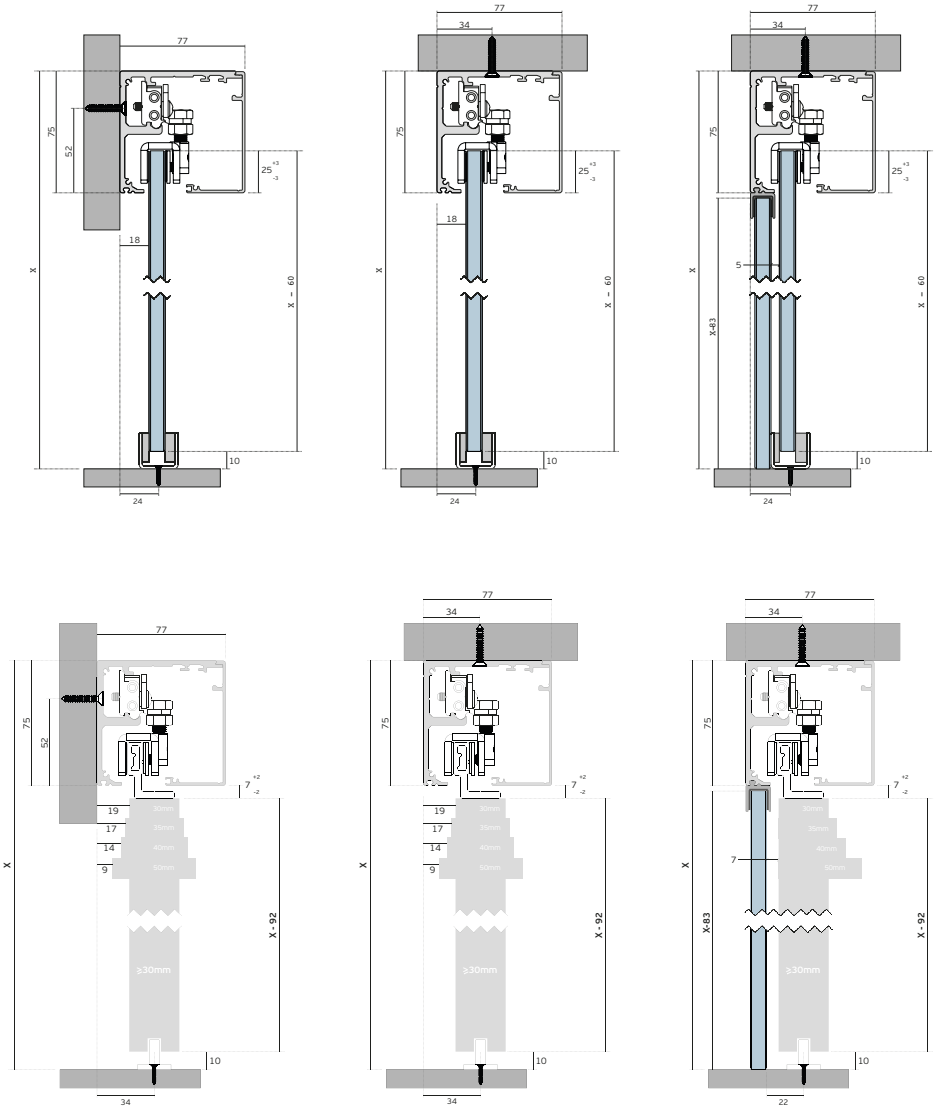
77
34
75
52
25 +3 -3
18
5
7 +2 -2
19
17
14
9
35mm
40mm
50mm
≥30mm
10
24
22
x
x – 60
x-83
x-92

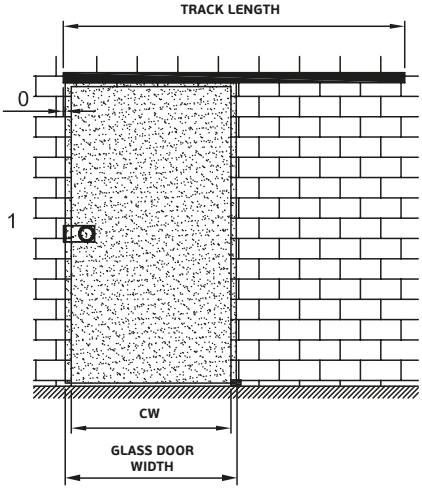

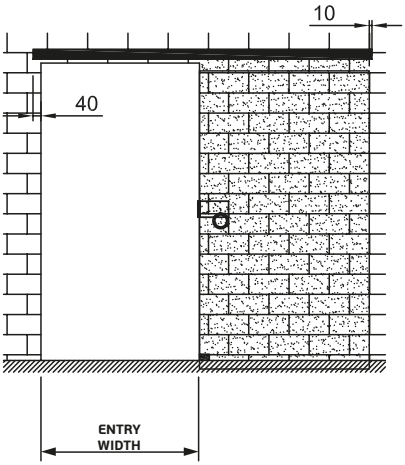

STANDARD RAIL LENGTH - 2000mm
CW - clear opening width (máx. 945mm)
GLASS DOOR WIDTH - CW + 60 rail length = (2 x CW) + 110

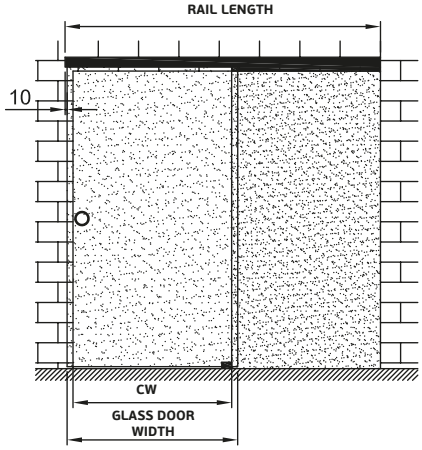

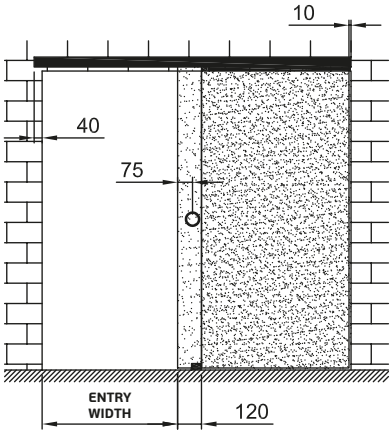

STANDARD RAIL LENGTH - 2000mm
CW - clear opening width (máx. 1005mm)
GLASS DOOR WIDTH - CW +60 rail length = (2 x CW) -10
ENTRY WIDTH - CW -120 side panel width = CW -50

B. SAFETY ANALYSIS PERFORMANCE

WARNING

1. Make sure the floor is level.
2. USE ONLY tempered (ESG) or laminated (VSG) glass with no sharp edges.
3. General data records.

LOCATION _____

DOOR SASHES ___SINGLE SASH ___DOUBLE SASH

DOOR WEIGHT _____ KGS

HOW TO CALCULATE YOUR DOOR WEIGHT

DOOR WEIGHT _____CM DOOR THICKNESS _____CM DOOR WIDTH _____CM

DOOR WEIGHT = HEIGHT (CM) x GLASS THICKNESS (CM) x WIDTH (CM) x 0.0026 (DENSITY)

- Make sure that all power supplies are completely disconnected during installation, regardless of using the power cord directly through the wall or the **MECANO** system power switch. The power cord or power switch can only be connected to the power supply when the installation is complete.

- The ground must be used to avoid electric shock, you can use a separate ground wire or the power cord is equipped with a ground wire connection when connecting.

WARNING

The MECANO system is operated only in low energy mode under the EN16005 standard, but in some circumstances it may be necessary to equip safety sensors to provide a higher level of safety for users. The assessment of the individual and operational environment should be preceded.

INSTALLATION CONTRACTOR

COMPANY _____

DATE _____ SIGNATURE _____

C. LIST OF COMPONENTS

x1 TRACK

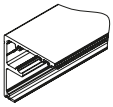

SIDE PANEL TOP RAIL (OPTIONAL)

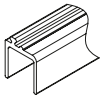

x1 POWER CABLE

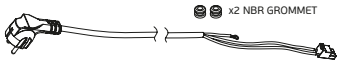

x1 CABLE CHANNEL COVER

x2 END COVER

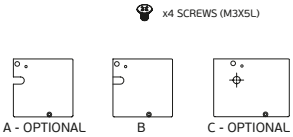

x10 CABLE HOLDER

x1 GROUND WIRE

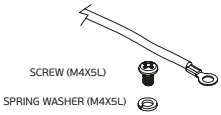

x1 BOTTOM GUIDE

x2 CARRIAGE

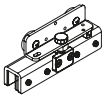

BELT CLAMP & SCREWS

x2 STOPPERS

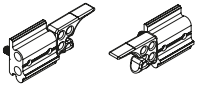

x1 INACTIVE GEAR BRACKET

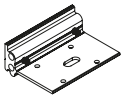

x1 INACTIVE BELT GEAR ASSEMBLY

x1 MOTOR BRACKET

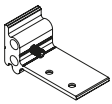

x1 MOTOR BUMPER BRACKET

x1 MOTOR

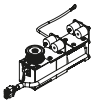

x1 BELT

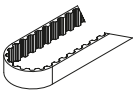

x1 BELT CLAMP COVER

x1 BELT SUPPORT BRACKET

x1 SENSOR BRACKET

x1 CONTROL UNIT BRACKET

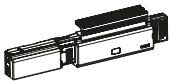

x1 FRONT COVER

x1 BUTTON COVER

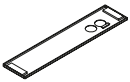

A. ASSEMBLY POSITION

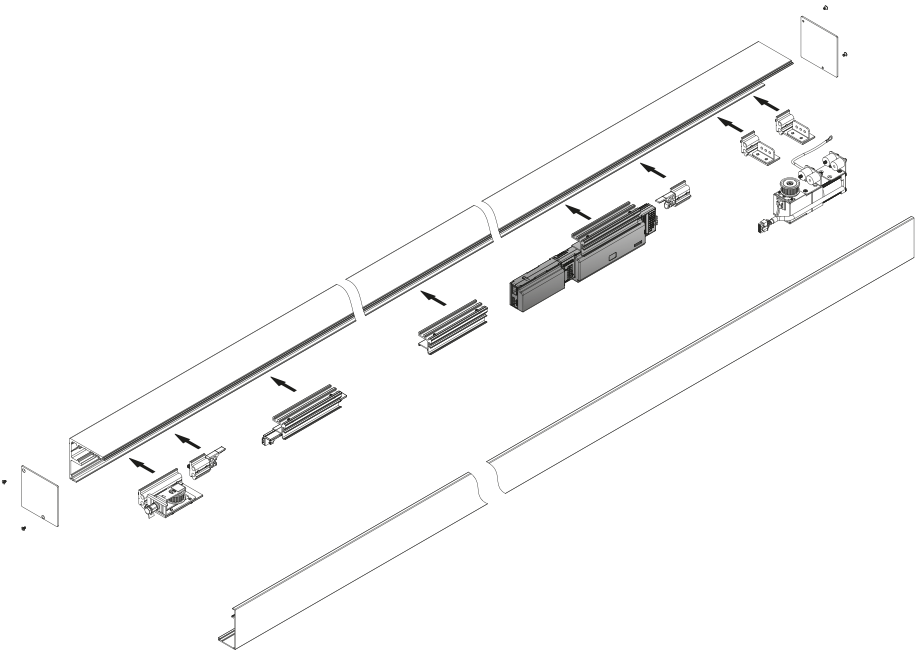

B. TOOLS

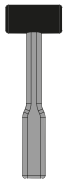

RUBBER HAMMER

DRILLING MACHINE

WRENCH

PHILLIPS SCREWDRIVER

LEVEL

ALLEN KEY

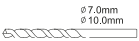

TORQUE DRILL

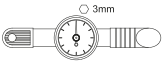

TORQUE WRENCH

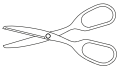

SCISSOR

C. TRACK AND COVER PREPARATION

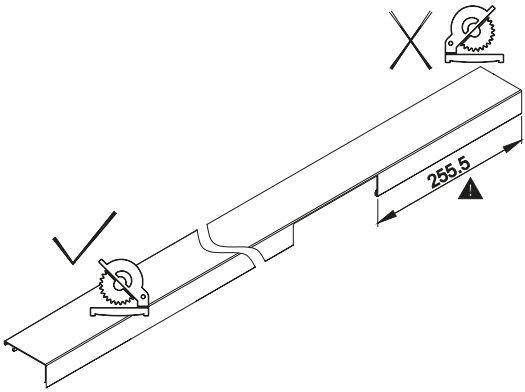

D. SUGESTED CABLE POSITION

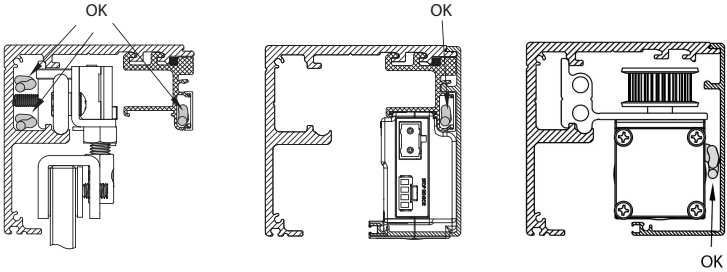

E. SIDE PANEL TOP RAIL (OPTIONAL)

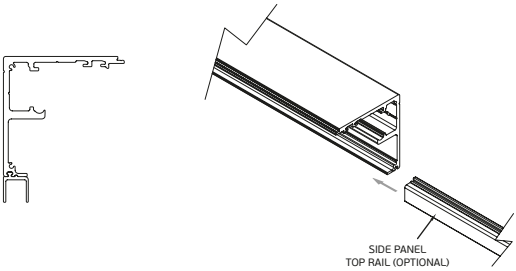

F. TRACK
F.1. POWER CABLE OUTPUT AROUND THE TRACK

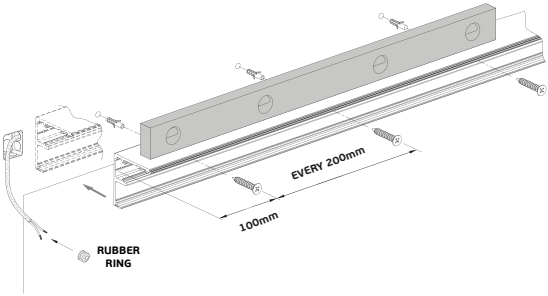

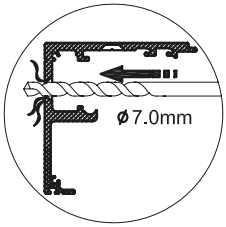

NOTE
Make a pre-drill hole for END COVER C (optional)

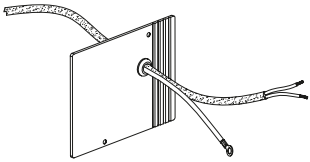

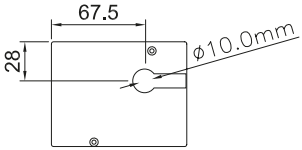

F.2. POWER CABLE OUTPUT POSITION BEHIND THE TRACK

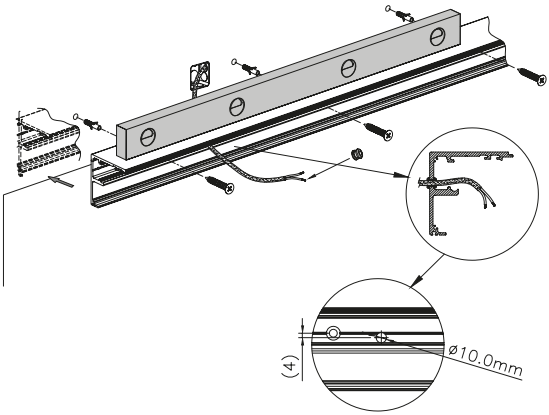

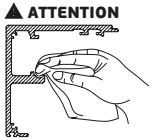

CLEAN THE TRACK
AFTER MOUNTING

G. SIDE PANEL (OPTIONAL)

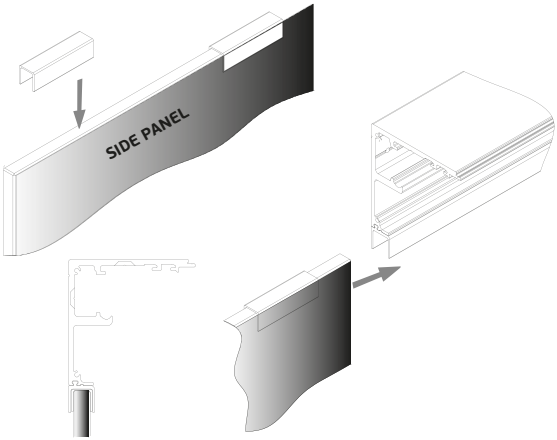

H. CABLE HOLDER

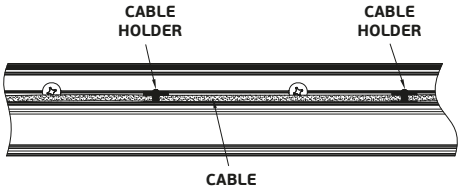

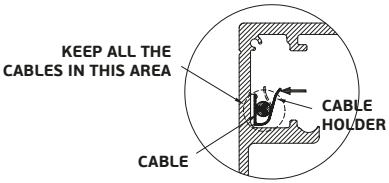

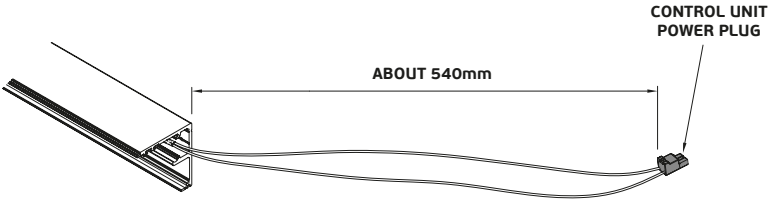

I. GROUND WIRE

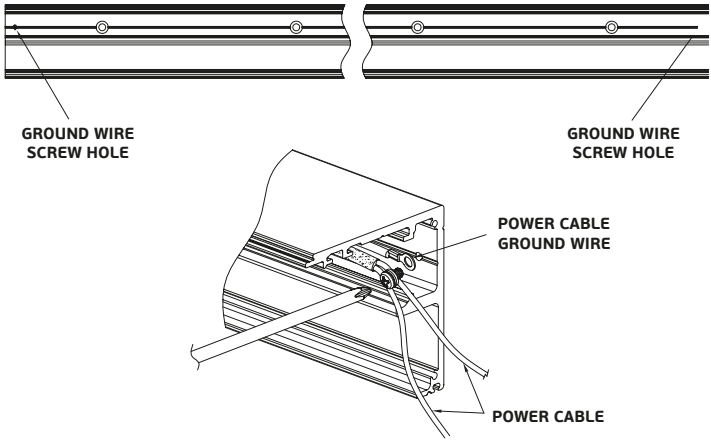

J. GUIDE ADJUSTMENT

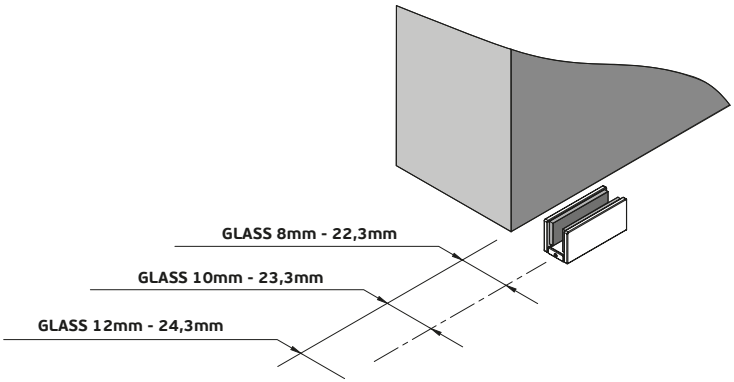

K. CARRIAGE - GLASS

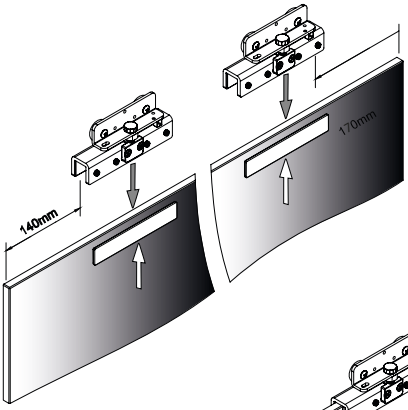

CLEAN THE GLASS WITH A DEGREASING AGENT BEFORE PROCEEDING WITH THE ASSEMBLY

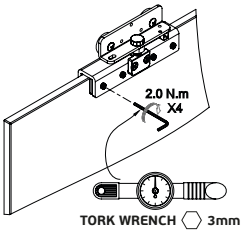

ATTENTION

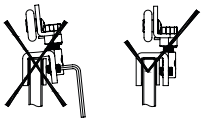

K. CARRIAGE - WOOD

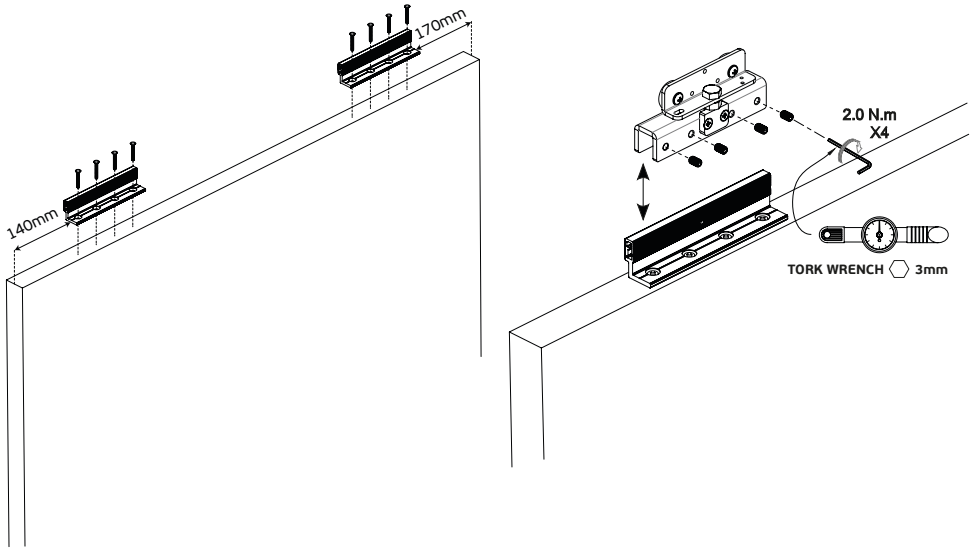

L. DOOR INSTALLATION - GLASS

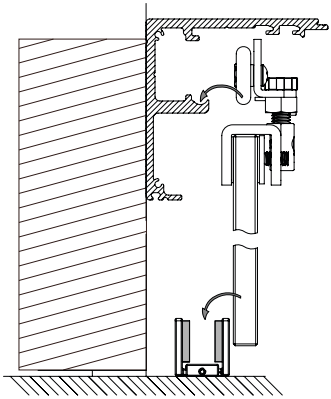

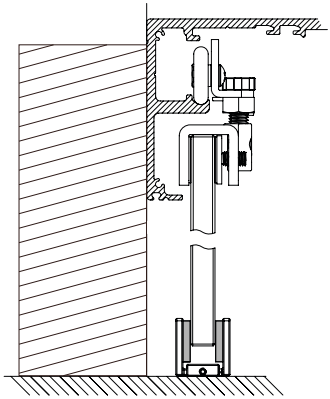

ATTENTION

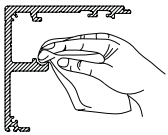

CLEAN THE TRACK
AFTER MOUNTING

L. DOOR INSTALLATION - WOOD

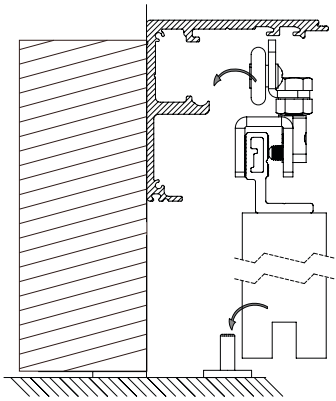

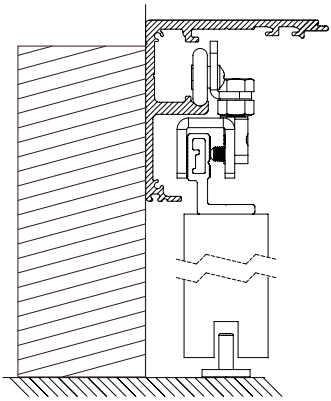

ATTENTION

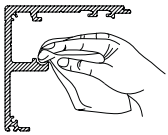

CLEAN THE TRACK
AFTER MOUNTING

M. DOOR HEIGHT ADJUSTMENT (+/- 400mm)

M.1. REPEAT STEP 1 & 2 TO ADJUST THE DOOR HEIGHT UP

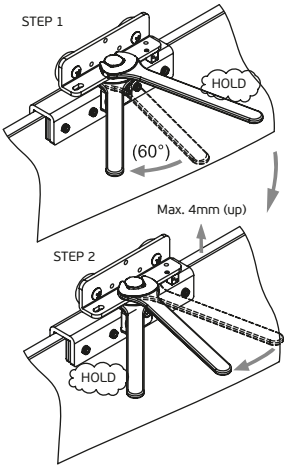

M.2. REPEAT STEP 1 & 2 TO ADJUST THE DOOR HEIGHT DOWN

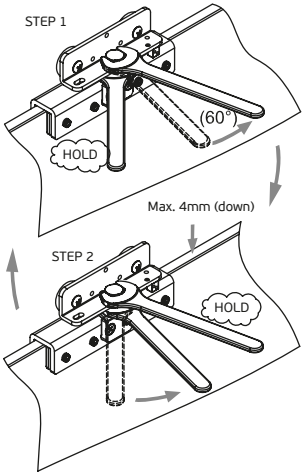

⚠ ATTENTION

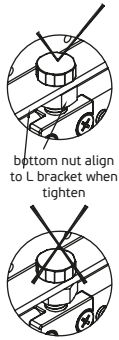

In order to prevent the door from falling, please repeat step 1 and 2 to gradually turn the adjustable screw

N. ANTI-FALLING DEVICE

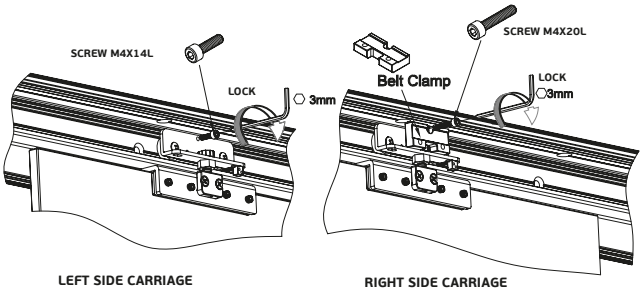

O. STOPPER

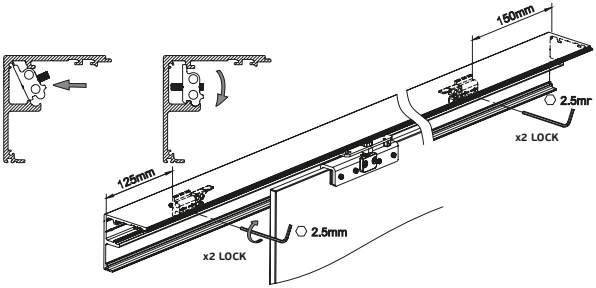

P. INACTIVE EQUIPMENT
P.1. INACTIVE GEAR BRACKET

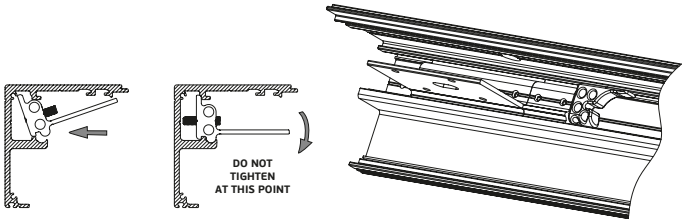

P.2. INACTIVE BELT GEAR ASSEMBLY

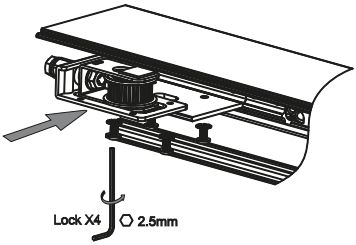

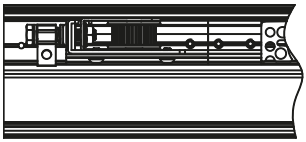

Q. MOTOR
Q.1. MOTOR BRACKET

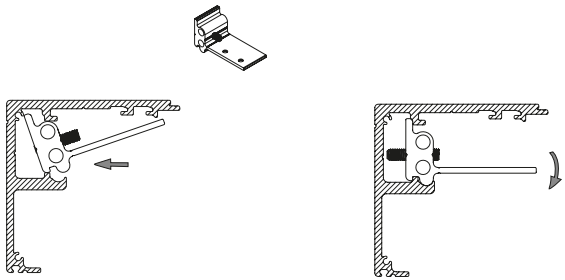

Q.2

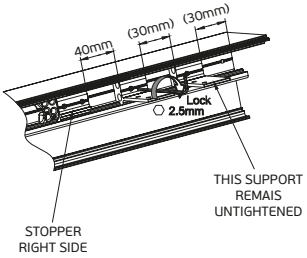

Q.3.

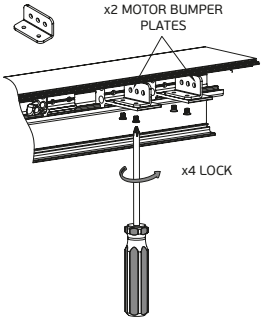

Q.4.

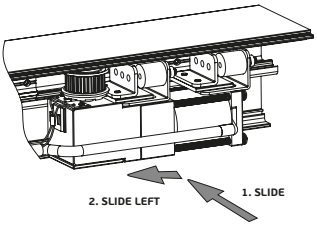

⚠ WARNING

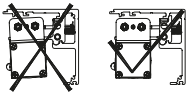

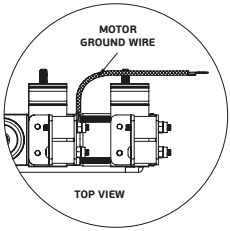

Q.5.

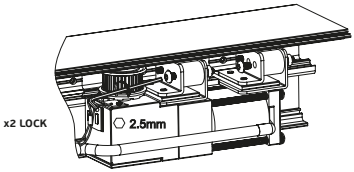

Q.6.

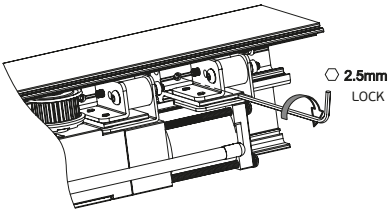

Q.7.

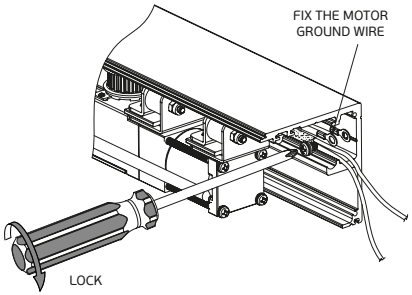

R. BELT

R.1.

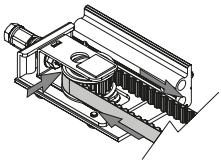

R.2.

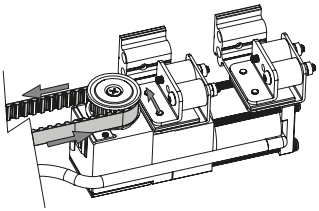

R.3. STRETCH BY HAND THE BELT

R.4. CUT THE EXCESS

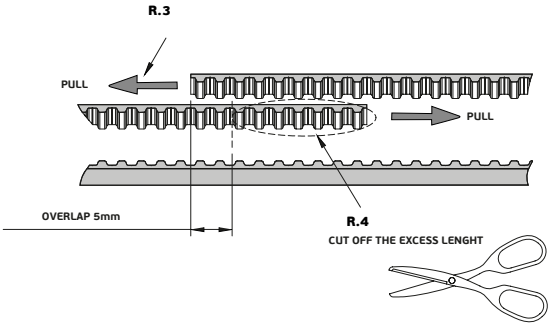

R.5.

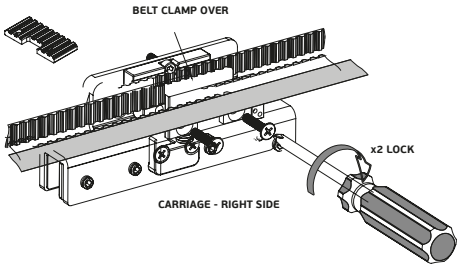
BELT CLAMP OVER
x2 LOCK
CARRIAGE - RIGHT SIDE

R.6.

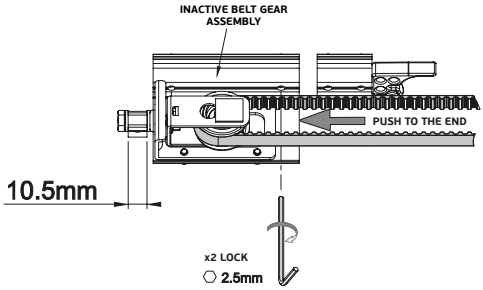
INACTIVE BELT GEAR ASSEMBLY
PUSH TO THE END
10.5mm
x2 LOCK
2.5mm

R.7.

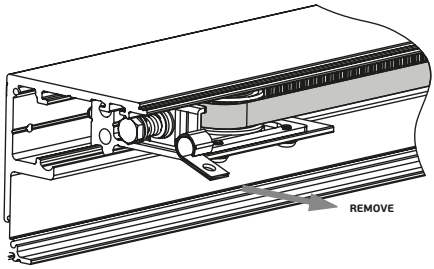
REMOVE

R.8. ADJUSMENT OF THE BELT TENSION (IF NEEDED)

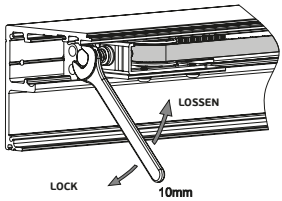

⚠ ATTENTION

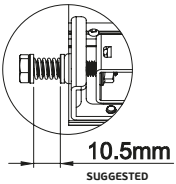

S. BELT SUPPORT BRACKET

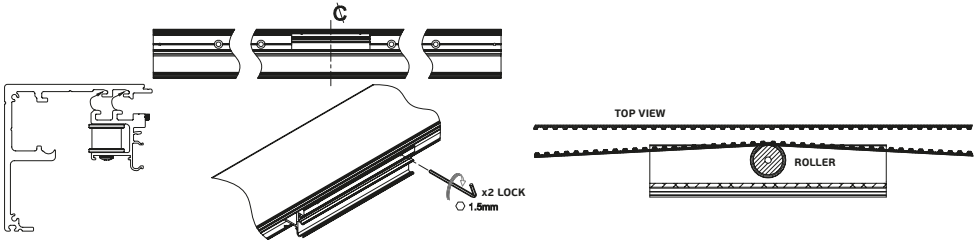

T. SENSOR BRACKET

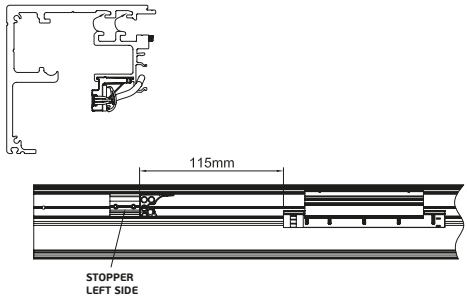

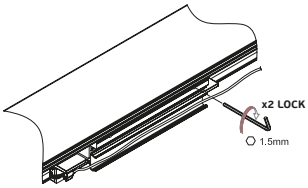

U. CONTROL UNIT BRACKET

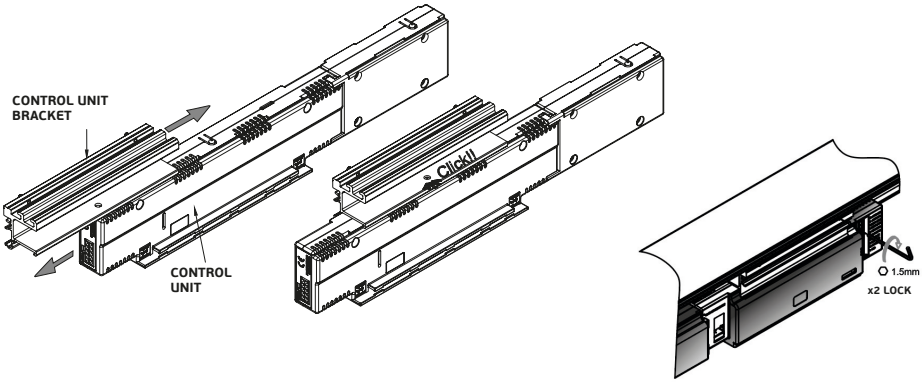

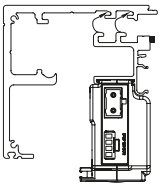

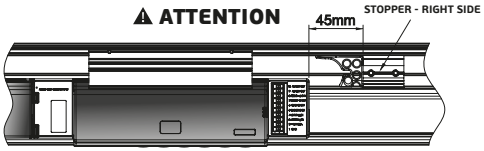

V. CABLE CONNECTION

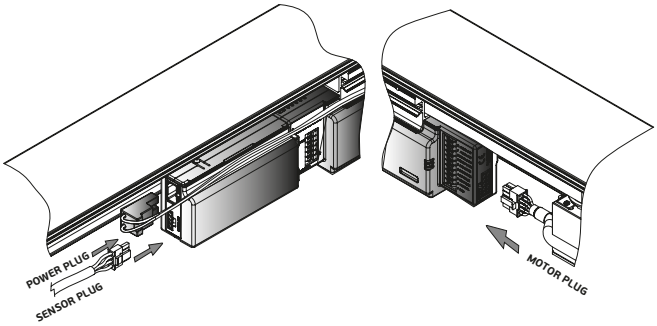

W. CABLE ARRANGEMENT

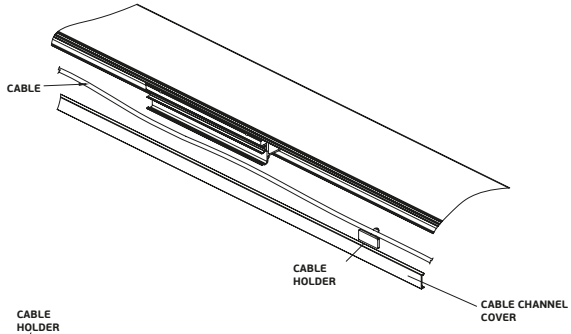

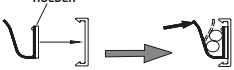

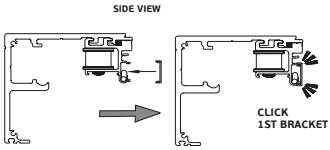

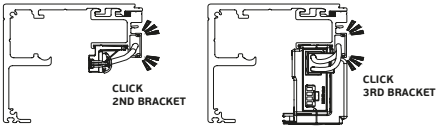

X. COVER

X.1. FRONT COVER

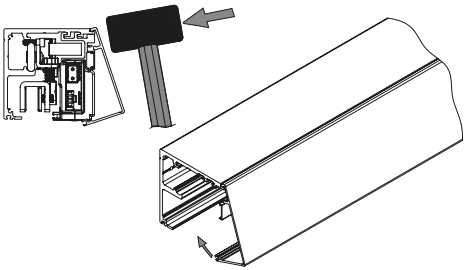

X.2. END COVER (B)

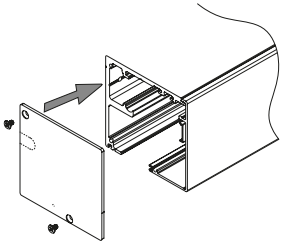

X.3 BUTTON COVER

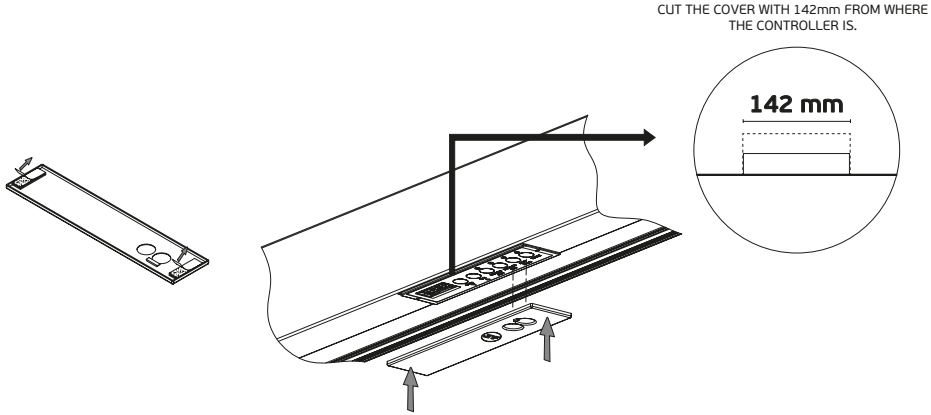

A. SETTINGS

How to set up your control unit
1. Power connector
2. Ground wire
3. Motor
4. Stop sensor connector

The drive system is for building in. Only the side panel display is accesible to the user.
For the others, the compliance must be check and installed by a qualified electrician.

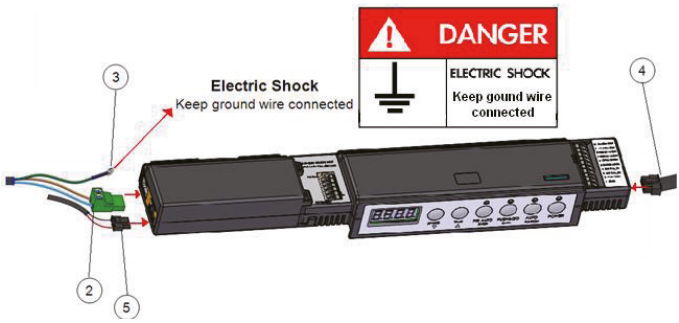

B. MAXIMUM OUTPUT POWER FOR OPTIONAL ACCESSORIES

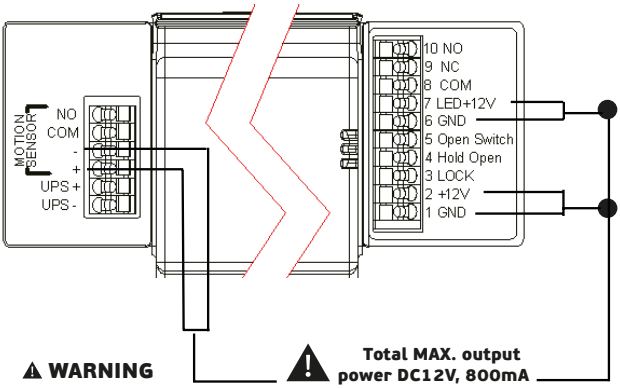

C. CONTROL UNIT OPERATION MODES

POWER ON
1. After turning on the power, the door must perform the automatic working distance setting. After configuration, the door will return to the closed position.
2. Auto, PUSH & GO will also be set as the default setting. The two LED lights are on.

AUTO ON = AUTOMATIC MODE
When the open switch or the motion sensor is activated, the door opens and closes automatically after a predefined time delay.

AUTO OFF = SEMI AUTOMATIC MODE
1. The door is kept in the open position when the switch is activated; it will only close when the switch is pressed again.
2. The motion sensor will be disabled in semi-automatic mode.

PUSH & GO ON
When the AUTO LED light is off, you can push the door approximately 10mm to open it, the door will then open automatically. Then keep the door in the open position until someone pulls the door to close.

When the AUTO LED light is on, you can push the door approximately 10mm to open it, the door will then open automatically and close after a predefined time delay.

PUSH & GO OFF
The door is in manual mode when the PUSH & GO LED light is off.

POWER FAILURE
In the event of a power failure, the door will be switched to manual mode. After the power returns, the door will return to the closed position and restore all settings before the power failure.

SECURITY PROTECTION
1. If the door hits an obstacle during opening, it will stop immediately until the user pushes / pulls the door.
2. If the door hits an obstacle during closing, it will open immediately the first time. If the door hits an obstacle during closing the second time, the door will stop immediately until the user pushes / pulls the door.
3. When the door stops, the safety protection mechanism will be activated, the motion sensor will be disabled.

EXCEED POWER LIMITS
The control unit can supply a max. 800mA, if the total of optional accessories exceeds 800 mA, the control unit will be turned off immediately. Only after the control unit detects that the total output does not exceed the limitation, will the control unit function normally again.

D. WIRING FOR OPTIONAL ACCESSORIES

SWITCH / BUTTON OPEN AND CLOSE

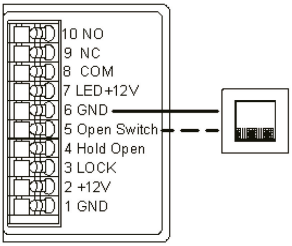

PUSH TO OPEN (PUSH TO CLOSE)

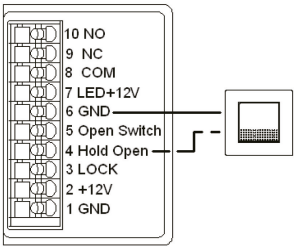

LED LIGHT (LIGHTS UP DURAING THE DOOR MOVEMENTS)

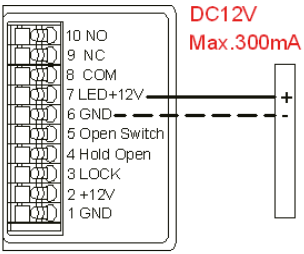

REMOTE CONTROL 433.92MHz

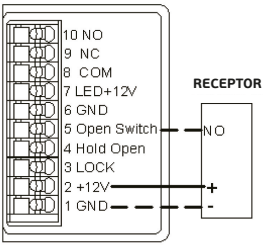

MOTION SENSOR
(ACTIVE ONLY IN THE AUTOMATIC MODE)

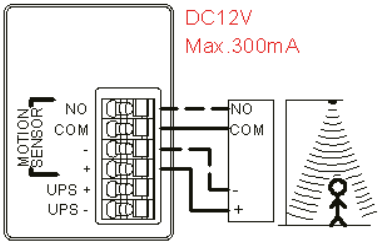

ELECTRONIC LOCK

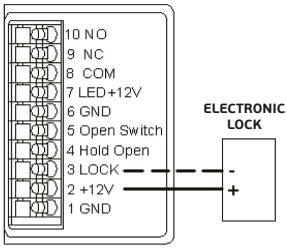

E. CONTROL UNIT SETTING AND ADJUSTMENT

STANDARD DEFAULT SETTING AFTER TURNING THE POWER ON
a. open to the right
b. AUTO, PUSH & GO
c. TIME to delay 2,5 seconds

After turning the **POWER** on, the LED display flashes 8888 and three LED lights (POWER, AUTO, PUSH&GO button) flash repeatedly, the door moves at a slow speed and returns to the closing position. Please wait until the LED display shows SP to do the following.

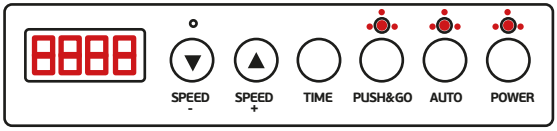

CHANGE THE OPENING DIRECTION
(If there is no need to change the door opening direction, please proceed to STEP 2 directly)

STEP 1 - Opening direction setting

Default: open to the right
Press the **AUTO** button. Change from open to the right (left) to open to the left (right)

A. Press the **AUTO** button for 3 seconds until the LED display shows **F.001** to enter the opening direction setting

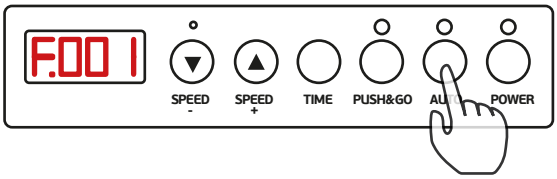

B. Press the **TIME** button to see the default setting **R** (open to the right) or the current direction **L** (open to the left)

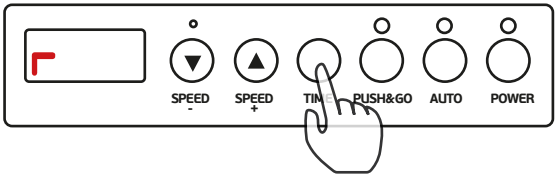

C. Press the button **SPEED +** or **SPEED -** to change from **R** to **L** (open to the left) or from **L** to **R** (open to the right)

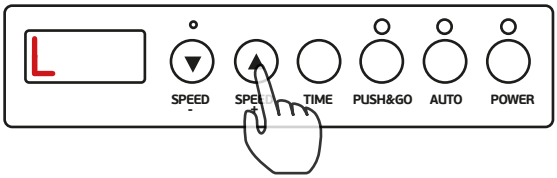

D. Press the **TIME** button again to confirm the change.

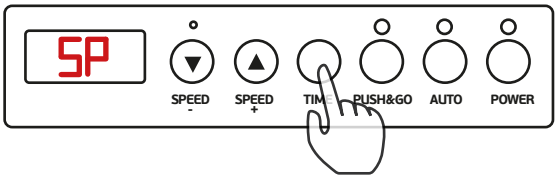

E. How to memorize the change

1. Press the power **POWER** button to turn off
2. Pull the door to the center of the track
3. Press the power **POWER** button to turn on
4. The door will stop at the closing position according to your setting

STEP 2 - Automatic working distance setting

Only under the circumstances below, is it necessary to perform the automatic working distance setting.
1. The first time you use the system;
2. When you move the sensors of both ends.

The working distance setting procedures are as follow
A. Make sure the power is off
B. Pull the door to the center of the track
C. Press the **POWER** button for 3 seconds to begin the automatic working distance setting

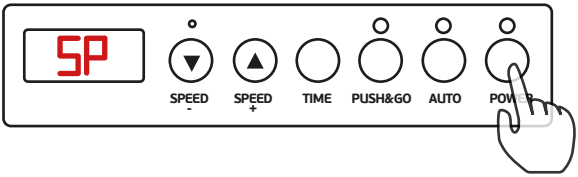

D. The three LED lights at the bottom will flash repeatedly. The door will slide automatically and will proceed with the distance setting.

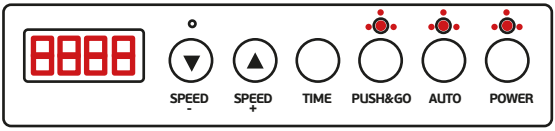

E. During the setting, the door moves at a slow speed and stops at the closing position after the end of the cycle.

STEP 3 - Working speed setting

INCLUDING		**RANGE**
A. Opening/closing speed	01-15	Slow ⟷ Fast
B. Braking speed	01-05	Slow ⟷ Fast
C. Braking distance (%)	30-70	Slow ⟷ Fast

HOW TO ADJUST SPEEDS

A. If the weight of the door is over 50kg, then the suggested configuration is as follows

DOOR WEIGHT	OPENING SPEED	CLOSING SPEED	BRAKING SPEED	BRAKING DISTANCE (%)	NOTE
51kg - 60kg	12	8	01	50%	sugestion
61kg - 70kg	12	8	01	50%	sugestion
71kg - 80kg	14	10	01	50%	sugestion

B. If the weight of the door is less than 50kg, then the suggested configuration is as follows

DOOR WEIGHT	OPENING SPEED	CLOSING SPEED	BRAKING SPEED	BRAKING DISTANCE (%)	NOTE
- 40kg	11	6	02	50%	default
40kg - 50kg	11	6	02	50%	default

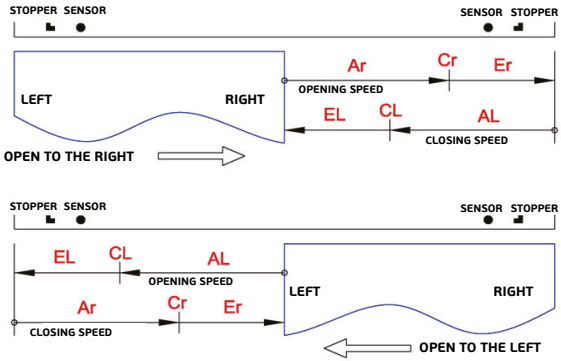

IMAGE CAPTION

A - OPENING/CLOSING SPEED
E - BRAKING SPEED
C - BRAKING SPEED

The speed may vary due to the door size and weight.

HOW TO ADJUST
Press the **SPEED** button for 3 seconds to enter the speed adjustment setting

OPENING / CLOSING SPEED
A. When the LED display shows **Ar XX** of the current speed, if you want to change, press the **SPEED +** button to increase the speed or the **SPEED -** button to decrease the speed.

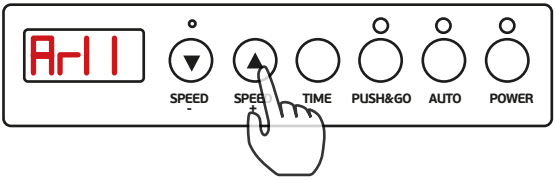

B. Or press the **TIME** button until the LED display shows **AL XX** of the current speed, then press the **SPEED +** button to increase the speed or **SPEED -** to decrease the speed.

BRAKING SPEED
A. Press the **TIME** button until the LED display shows **Er XX** of the current brake speed, then press the **SPEED +** button to increase the speed or the **SPEED -** button to decrease the speed.

B. Or press the **TIME** button until the LED display shows **EL XX** of the current brake speed, then press the **SPEED +** button to increase the speed or the **SPEED -** button to decrease the speed.

BRAKING SPEED (%)
A. Press the **TIME** button until the LED display shows **Cr XX** of the current brake distance (%) and then press the **SPEED +** button to increase speed or the **SPEED -** button to decrease speed.

B. Or press the **TIME** button until the LED display shows **CL XX** of the current brake distance (%) and then press the **SPEED +** button to increase speed or the **SPEED -** button to decrease speed.

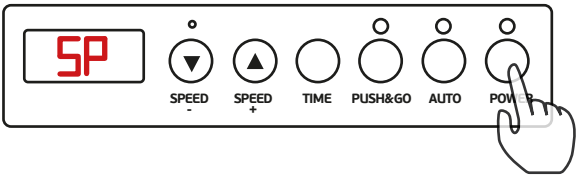

Please press the **POWER** button to confirm your setting when you have completed all speed settings. All of your settings will be automatically memorized and displayed on the next door movement. The power will still be on.

HOW TO ADJUST
If you follow the speed suggested in the table above, but find the door:

1. Hitting the left hand (or right hand) ramp backwards, increase the braking distance (%) by pressing the **SPEED +** button or decrease the braking speed by pressing the **SPEED -** button.

2. Stops before reaching the stopper, increase the braking speed by pressing the **SPEED +** button or decrease the breaking distance (%).

STEP 4 - Closing time delay setting (default - 2.5 seconds)

Press the **TIME** button to change the LED display time delay from 0/1/2.5/10/15/20/30 seconds to set the delay in automatic mode. This setting will be automatically memorized and shown on the next movement of the door.

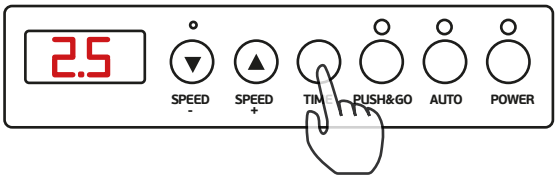

STEP 5 - Change between operating modes (default: AUTO, PUSH & GO function)

Press **AUTO** button to deactivate automatic mode, the LED light of the **AUTO** button will be off. This configuration will be automatically memorized and shown on the next movement of the door.

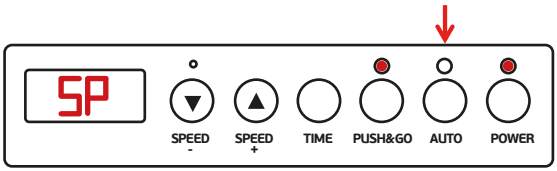

Press the **PUSH&GO** button to disable **PUSH&GO** mode, the LED light of the **PUSH&GO** button will be off. This setting will be automatically memorized and shown on the next movement of the door.

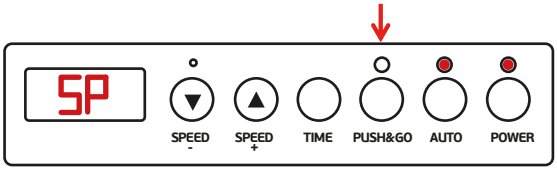

6. OPERATION INSTRUCTIONS

EN

STEP 6 - Reset to default

When your settings are incorrect and unable to reset

1. Take a paper clip, press it into the reset hole and listen for a beep.
2. Press the POWER button to turn off
3. Pull the door to the center of the rail
4. Press the POWER button for 3 seconds to start the automatic setting of the working distance

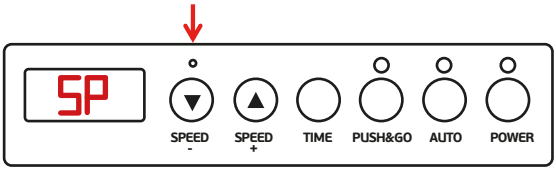

7. MAINTENANCE

EN

A. You need to fully understand and read the checklist below completely before running **MECANO.**

B. Check the system and all safety equipment at least **once a year** through a qualified inspector, who should take note of the data for registration.

8. TROUBLESHOOTING

PROBLEM	POTENCIAL CAUSE	SOLUTION
the **POWER** button does not light up	**1.** there is no power supply **2.** loose plug **3.** damaged power cord/plug	**1.** check the power supply **2.** reconnect the plug **3.** replace the power cord/plug for a new one
the control unit is light up but the door does not respond	**1.** the motor cable is not well connected to the control unit **2.** damaged motor **3.** damaged control unit **4.** the cable sensor is not well connected to the control unit	**1.** reconnect the motor cable to the control unit **2.** replace the motor **3.** replace the control unit **4.** reconnect the cable sensor to the control unit
the door does not fully open/close but the stops before the opening/closing position	**1.** some friction on the track that slows down the door movement **2.** the speed is slow	**1.** clean the dust in the track **2.** increase the speed
the door does not stop at either of the closing/opening position according to your setting but repeatedly opens/closes	**1.** inconsistent data input in the control unit **2.** exceeded door speed and the door detects an obstacle, the push&go funtion is activated	**1.** run the automatic mode working distance setting **2.** adjust the speed slower
loud noise with consistency during the door movement	**1.** obstacle on the rollers **2.** damaged rollers **3.** damaged track **4.** check if there is any interference during the movement. For example: if the glass door touches the motor or if the carriage touches the belt or the control unit	**1.** check the rollers on the carriage **2.** replace the complete carriages **3.** replace the track for a new one if it can not be repaired **4.** remove the interference
loud noise but inconsistency during the door movement	there is an obstacle on the track	clean and the check the track
the door moves beyond the set position	the stopper is loose	tighten both stoppers
1. the door movement slows down in an abnormal speed **2.** incorrect action of the motion sensor	exceeded maximum output power	recheck the individual accessories connected to the control unit (max. 800mA) to see if it does not exceed the mA
the door is slipping	**1.** the adjustment screw on the carriage is not tighten **2.** the clamp screw is not tighthen	**1.** tighten the adjusment screw according to the installation manual **2.** tighten the screw with a 2.0 Nm force
the door does not respond to the motion sensor	**1.** the motion sensor is disable in the semi-automatic mode **2.** the motion sensor is disable when the door hits an obstacle the second time and turns on the protecting defense mode **3.** the motion sensor cable is loose	**1.** check your settings **2.** remove all obstacles and reactivate the door **3.** connect the cable

9. WARRANTY

THE WARRANTY IS FROM THE DATE OF MANUFACTURE, AGAINST DEFECTS IN MATERIAL AND WORKMANSHIP. THIS WARRANTY WILL BE ACCEPTED THROUGH THE APPROPRIATE PURCHASE DOCUMENTATION AND WILL ONLY BE AVAILABLE FOR REPLACEMENT BY THE ORIGINAL PURCHASER.

This warranty is valid only for the use of the manufactured components.
This warranty does not apply to products that:

1. They are being used in unplanned or planned situations.
2. Have been altered or repaired without JNF's written consent.
3. They have been subject to abuse, neglect, misuse and/or accidental damage to the product.
4. They were installed incorrectly or maintained incorrectly.

JNF will guarantee products found to be defective by replacing them with new units, but will not be responsible for the following costs:

1. Labor costs associated with product removal and replacement.
2. Shipping costs associated with the warranty
3. Normal and recommended product maintenance.
4. Economic losses associated with product replacement.

NO OTHER WARRANTY, EXPRESSED OR IMPLIED, WILL REPLACE THIS GUARANTEE.

NOTES

NOTES

Vetro Group AB

Kvistvägen 2
433 48 PARTILLE

www.vetro.se / info@vetro.se

THE SPECIFICATIONS CONTAINED IN THIS INSTALLATION MANUAL MAY BE CHANGED WITHOUT NOTICE.